DIMENSIONS

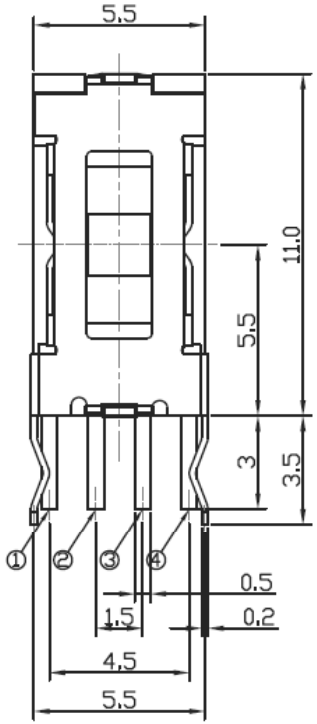

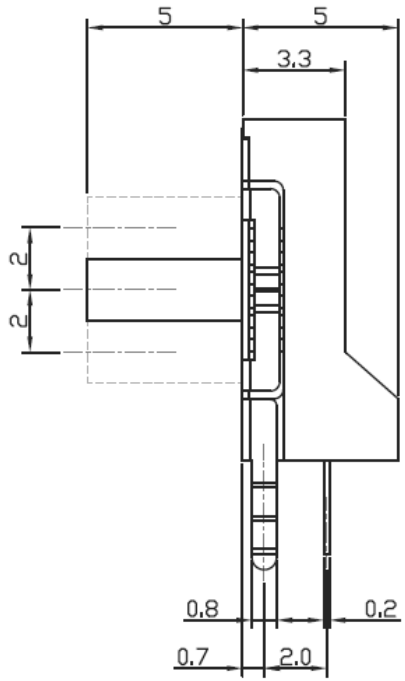

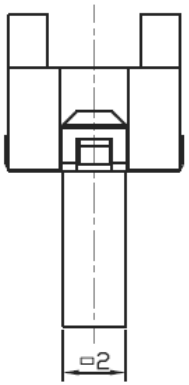

CIRCUIT DIAGRAM

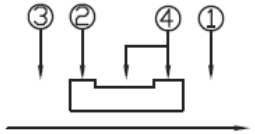

P.C.B MOUNTING PATTERN DIMENSION

The following soldering patterns are recommended for reflow soldering

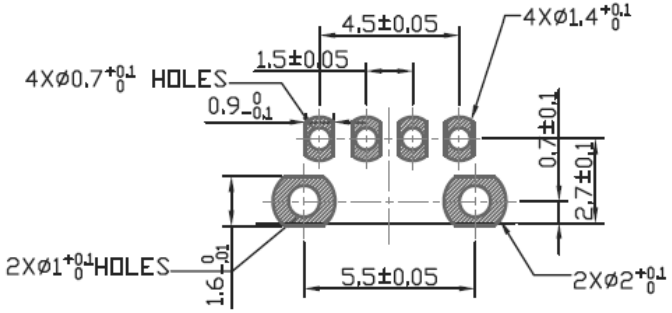

SPECIFICATIONS :

1. RATING : DC 6V, 0.3A Max
2. OPERATING FORCE :250±150gf
3. CONTACT RESISTANCE : 100mΩ Max
4. TRAVEL : 2.0±0.3 ㎜
5. LIFE : 10,000 Cycles Min

銓 基 電 子 股 份 有 限 公 司 ROKI ELECTRONICS CO., LTD.	PART NAME : SLIDE SWITCH	SCALE :
	PART NO : ST13005-G5-PF	UNIT : ㎜
	TOLERANCE : ±0.3 ㎜	VER : R03